REVISIONS				
ZONE	REV.	DESCRIPTION	DATE	APPROVED

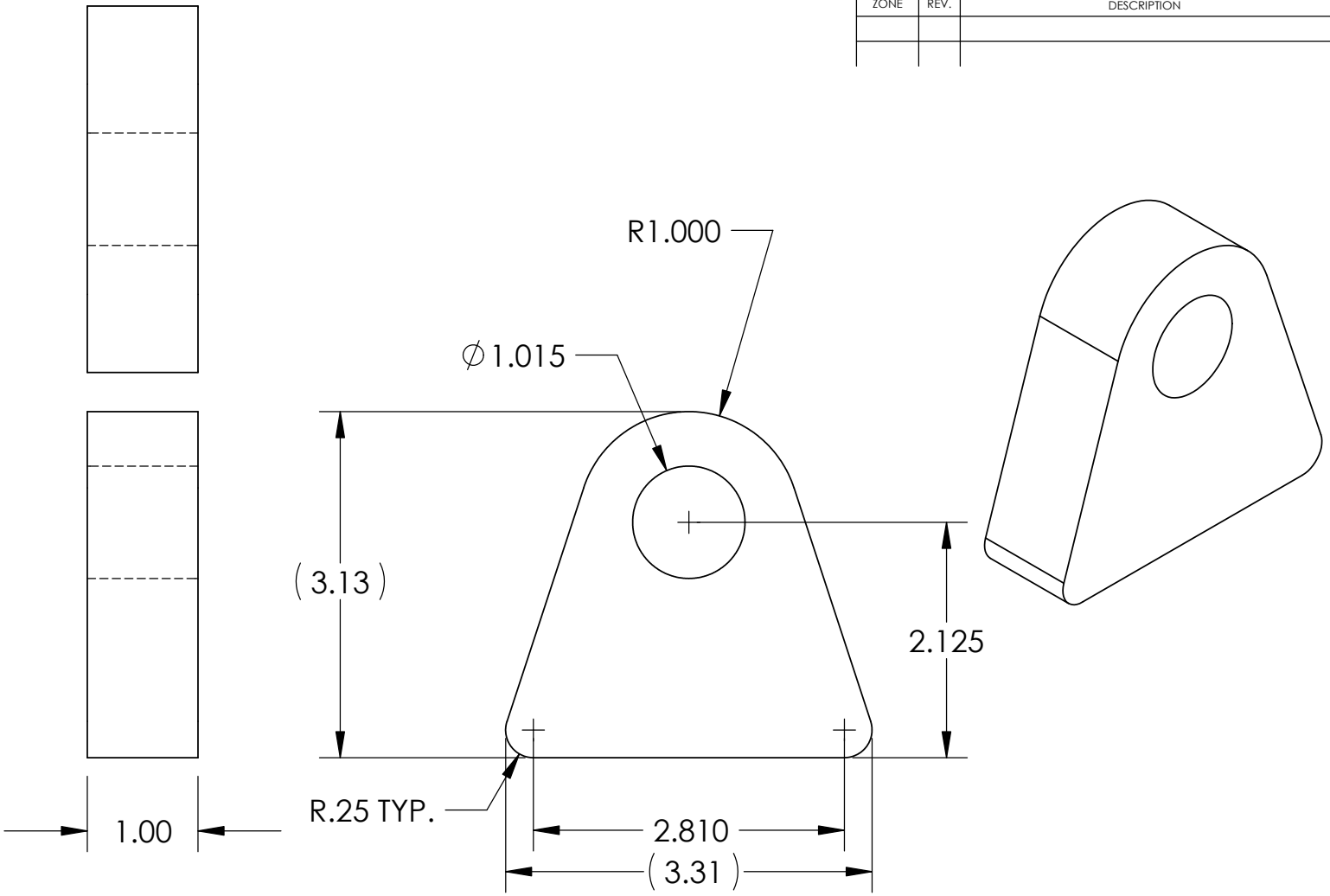

		UNLESS OTHERWISE SPECIFIED:		NAME	DATE
		DIMENSIONS ARE IN INCHES TOLERANCES: FRACTIONAL ± ANGULAR: MACH ± BEND ± TWO PLACE DECIMAL ± .06 THREE PLACE DECIMAL ± .03	DRAWN	IDP	03-03-03
			CHECKED		
			ENG APPR.		
			MFG APPR.		
		INTERPRET GEOMETRIC TOLERANCING PER:	Q.A.		
		MATERIAL	COMMENTS:		
NEXT ASSY	USED ON	FINISH			
APPLICATION		DO NOT SCALE DRAWING			

KANAMAK HYDRAULICS, INC.

TITLE:

LUG

SIZE	DWG. NO.	REV
A	E-15	
SCALE: 1:1.5	WEIGHT:	SHEET 1 OF 1

PROPRIETARY AND CONFIDENTIAL

THE INFORMATION CONTAINED IN THIS DRAWING IS THE SOLE PROPERTY OF KANAMAK HYDRAULICS, INC. ANY REPRODUCTION IN PART OR AS A WHOLE WITHOUT THE WRITTEN PERMISSION OF KANAMAK HYDRAULICS, INC. IS PROHIBITED.

5 4 3 2 1